2SK2974

DESCRIPTION
2SK2974 is a MOS FET type transistor specifically designed for VHF/UHF power amplifiers applications.

FEATURES
- High power gain:Gpe≥8.4dB
  @V_{DD}=7.2V,f=450MHz,Pin=30dBm
- High efficiency:55% typ.
- Source case type seramic package
  (connected internally to source)

APPLICATION
For drive stage and output stage of power amplifiers in VHF/UHF band portable radio sets.

OUTLINE DRAWING
Dimensions in mm

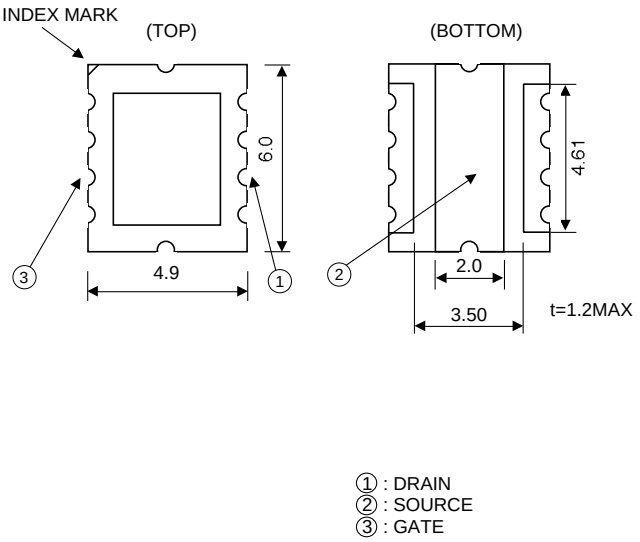

MARKING

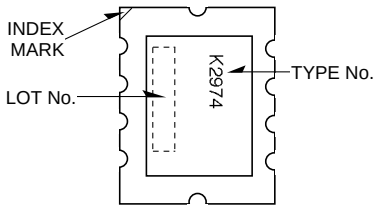

ABSOLUTE MAXIMUM RATINGS (T_C=25˚C, unless otherwise noted)

Symbol	Parameter	Conditions	Ratings	Unit
V_{DSS}	Drain to source voltage		17	V
V_{GSS}	Gate to source voltage		±10	V
P_{ch}	Channel dissipation	Tc=25˚C (Note2)	10	W
T_j	Junction temperature		175	˚C
T_{stg}	Storage temperature		-40 to +110	˚C

Note1: Above parameters are guaranteed independently.
2: Solder source pad on Copper Block(14×2.8×2mm)

ELECTRICAL CHARACTERISTICS (T_C=25˚C, unless otherwise noted)

Symbol	Parameter	Test conditions	Limits			Unit
			Min	Typ	Max	
I_{DSS}		V_{DS}=17V, V_{GS}=0V	—	—	10	µA
I_{GSS}		V_{GS}=10V, V_{DS}=0V	—	—	1	µA
V_{TH}	Threshold voltage	V_{DS}=7V, I_{DS}=1mA	1.0		1.7	V
C_{iss}		V_{GS}=10V, V_{DS}=0V,f=1MHz		90		pF
C_{oss}		V_{DS}=10V, V_{GS}=0V,f=1MHz		95		pF
P_{out}		V_{DS}=7.2V, P_{in}=1W,f=450MHz	7	8		W
h_D			50	55		%

Note: Above parameters,ratings,limits and conditions are subject to change.

TYPICAL PERFORMANCE DATA

IDS VS. VDS

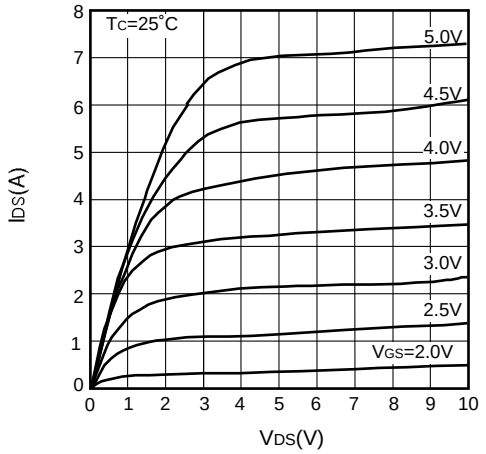

IDS VS. VGS

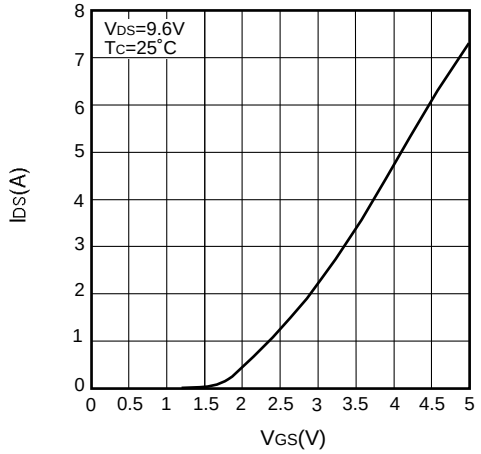

Po, ηadd VS. Pin

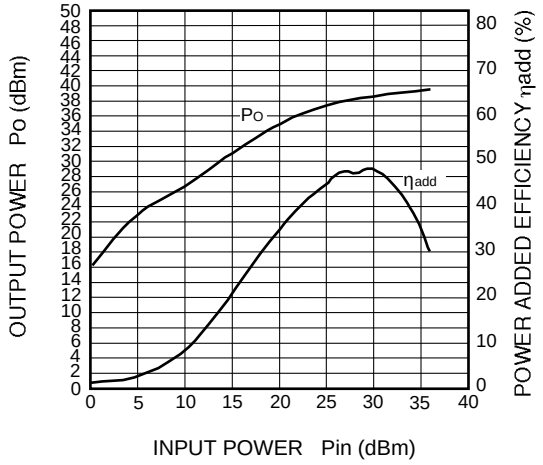

Po, ηadd VS. VDD

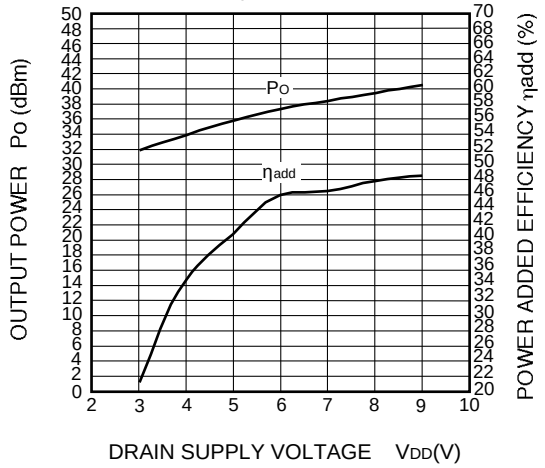

EQUIVALENT CIRCUIT

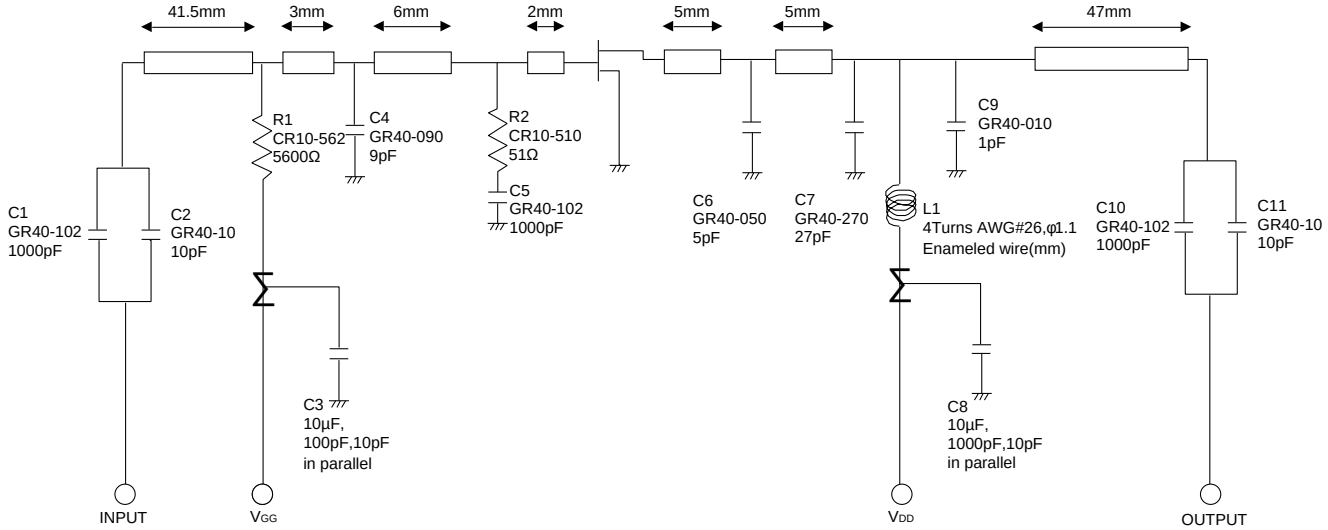

Note: Board material-glass epoxi substrate
micri strip line width=2.8mm, ε r :4.8,t=1.6mm

S-PARAMETER DATA(TYPICAL)

V_{DD}=7.2V,I_D=600mA

FREQ. (MHz)	S_{11}		S_{12}		S_{21}		S_{22}	
50	0.87151	-159.60	0.02263	6.0727	8.98850	91.5160	0.75544	-169.72
100	0.87157	-168.20	0.02175	0.6356	4.47355	81.1597	0.77551	-171.14
150	0.88083	-170.84	0.02059	-2.3595	2.87870	72.5416	0.78986	-172.22
200	0.89043	-172.00	0.01885	-2.7489	2.05082	67.1200	0.80776	-171.94
250	0.90037	-172.68	0.01735	-1.3541	1.57746	61.7324	0.83272	-171.89
300	0.90814	-173.24	0.01580	1.7258	1.24044	57.2616	0.83624	-171.98
350	0.91746	-173.67	0.01446	7.6264	1.01298	53.9587	0.85264	-172.07
400	0.92499	-174.06	0.01346	14.4503	0.84559	50.7854	0.86892	-172.50
450	0.93036	-174.43	0.01268	22.2439	0.71792	47.8135	0.87130	-172.39
500	0.93571	-174.90	0.01263	31.1934	0.62459	45.8295	0.88564	-172.57
550	0.93941	-175.30	0.01272	40.3158	0.54469	43.5312	0.89176	-172.90
600	0.94226	-175.57	0.01343	49.8125	0.48199	41.6364	0.89413	-173.01
650	0.94534	-176.04	0.01496	57.6698	0.42937	40.1854	0.90472	-173.39
700	0.94808	-176.45	0.01646	62.6933	0.38937	38.6233	0.90807	-173.70
750	0.95312	-176.90	0.01744	67.3336	0.35246	37.2574	0.91071	-173.95
800	0.95459	-177.37	0.01996	71.8032	0.32860	36.4384	0.91875	-174.46
850	0.95601	-177.87	0.02182	74.1606	0.29869	35.0739	0.91928	-174.80
900	0.95774	-178.27	0.02413	76.8760	0.27468	34.1654	0.91707	-175.08
950	0.95926	-178.87	0.02631	76.4323	0.25880	33.0220	0.92295	-175.88
1000	0.96325	-179.62	0.02817	78.7422	0.24131	32.7404	0.92417	-176.19
1050	0.96168	179.78	0.03099	78.8976	0.22658	31.8962	0.92742	-176.66
1100	0.96230	179.39	0.03270	78.4777	0.21380	31.1023	0.93216	-177.69
1150	0.96227	178.73	0.03460	79.5511	0.20166	30.5749	0.93331	-177.94
1200	0.96198	178.34	0.03660	80.3997	0.19253	30.1079	0.93364	-178.72
1250	0.96267	177.78	0.03846	79.7305	0.18153	30.7341	0.93557	-179.24
1300	0.96118	176.97	0.04065	80.5372	0.17023	29.4614	0.93599	-179.44
1350	0.96264	176.19	0.04304	80.7289	0.16501	29.5139	0.93290	179.28
1400	0.96245	175.54	0.04525	80.2058	0.15789	29.4685	0.93594	178.62
1450	0.96221	174.94	0.04730	79.8688	0.14964	29.2546	0.93314	178.32
1500	0.96205	174.16	0.04937	79.5813	0.14381	29.6617	0.93009	177.13